PART NO 5040001

VT FOOT

Stolpfot VT | VT Fuß

- L: 195 mm
- W: 125 mm
- H: 130 mm
- 1,1 kg
- Steel + Zn (hot dip galvanized)
- EN13374 – A

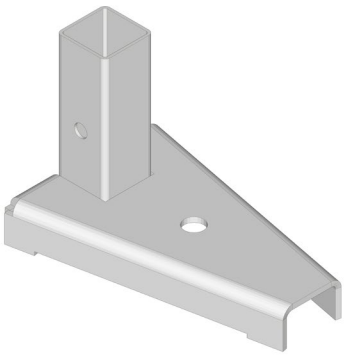

- 1,24 × 0,84 × 0,97 m
- 620 kg
- 500 pcs

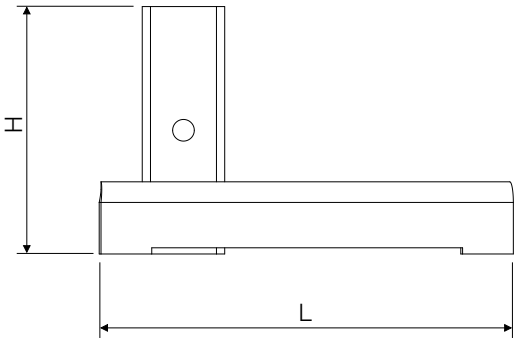

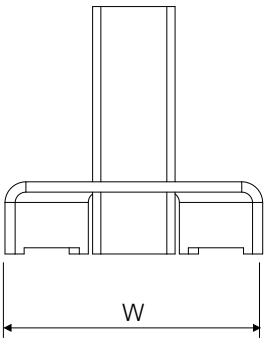

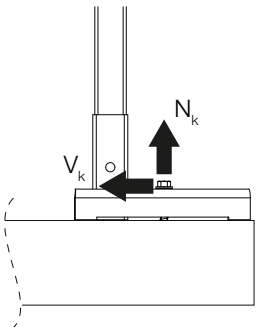

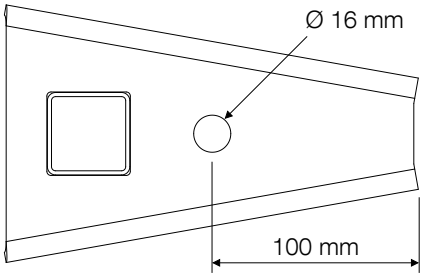

ANCHOR LOADS (Q)[1]	(Unfactored)
N_k	6,3 kN
V_k	0,7 kN

[1]) EN 13374:2013

$Q_{k,i} \times \gamma_F^* = E_d \leq R_d = R_k / \gamma_M \, (k_{mod}^{**})$

$^*\ \gamma_F = 1{,}5$ ** for timber

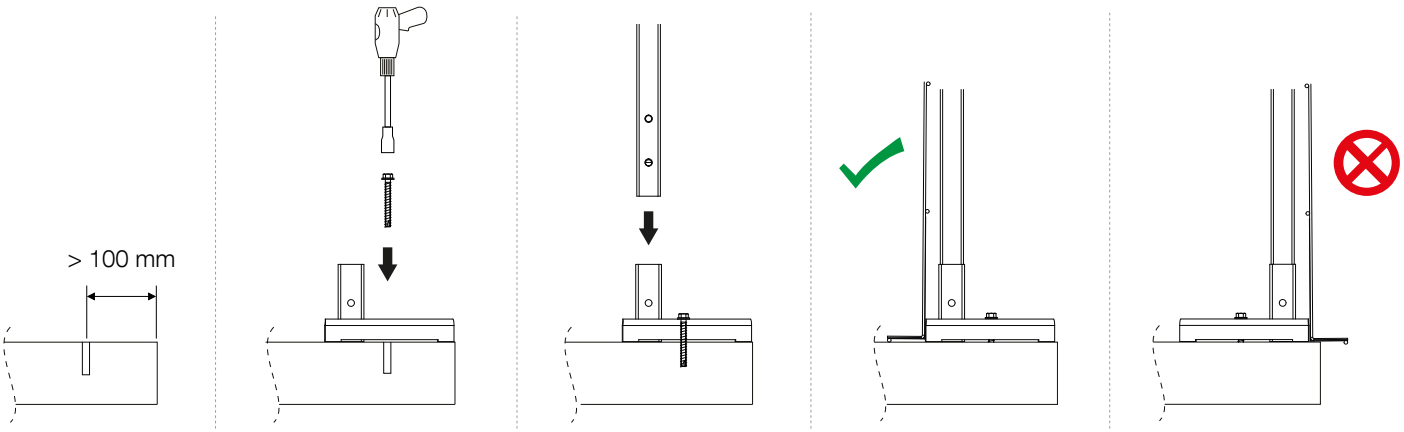

We reserve the right to make technical changes [Jul. 10 2024].